Please note that GaN Systems is an Infineon Technologies Company
The document following this cover page is marked as “GaN Systems” document as this is the company that originally developed the product. Please note that Infineon will continue to offer the product to new and existing customers as part of the Infineon product portfolio.

Continuity of document content
The fact that Infineon offers the following product as part of the Infineon product portfolio does not lead to any changes to this document. Future revisions will occur when appropriate, and any changes will be set out on the document history page.

Continuity of ordering part numbers
Infineon continues to support existing part numbers. Please continue to use the ordering part numbers listed in the datasheet for ordering.

Infineon Technologies AG
81726 Munich, Germany
www.infineon.com

Spice Model User Guide

User Guide

Visit www.gansystems.com for the latest version of this document

© 2019 GaN Systems Inc.

1. Introduction

Models provided by GaN Systems Inc. are not warranted by GaN Systems Inc. as fully representing all of the specifications and operating characteristics of the semiconductor product to which the model relates. The models describe the characteristics of typical devices. In all cases, the current data sheet information for a given device is the final design guideline and the only actual performance specification.

Although models can be a useful tool in evaluating device performance, they cannot model exact device performance under all conditions, nor are they intended to replace breadboarding for final verification. GaN Systems Inc. therefore does not assume any liability arising from their use. GaN Systems Inc. reserves the right to change models without prior notice.

2. Definitions and Functions of Model Levels

GaN Systems Inc. provides two different levels of models for GaN E-HEMT transistors. The definition and functions of the model levels are shown in the Table 1 and Table 2, respectively.

Table 1. Definitions of model levels

Suffix	Level	Terminals	Description
_L1	1	G, D, S, SS (if applicable)	General electrical simulations on application/converter level circuits. Focus on simulation speed.
_L3	3	G, D, S, SS (if applicable), Tc, Tj	In addition to L1, L3 also includes the thermal model and package stray inductance.

Table 2. Functions of model levels

Functions	Level 1	Level 3
IV performance as a function of temperature	✓	✓
Voltage-dependent capacitance	✓	✓
Thermal model	×	✓
Package stray inductance	×	✓

 © 2019 GaN Systems Inc.

2.1. Level 1 model

The Level 1 model has either three or four terminals. For those devices with a source sense terminal, a fourth pin SS will be provided as well. Their symbols are shown in Fig. 1. Note that the dual gates or dual source senses are not modelled.

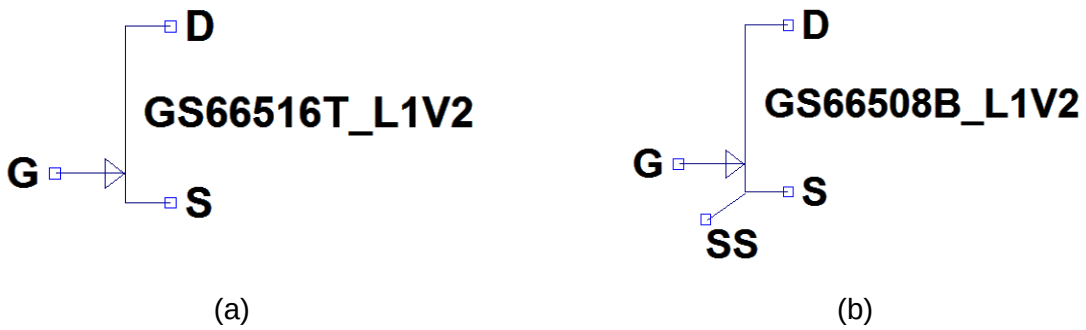

(a) (b)

Fig. 1. Level 1 model symbol, (a) without SS terminal, (b) with SS terminal.

For the Level 1 model, as the thermal network is not included, the junction temperature needs to been defined. User can put an additional SPICE Directive command to set the junction temperature as shown in below,

```
.option temp=85; Set Tj
```

2.2. Level 3 model

In addition to Level 1 model, the Level 3 model also includes the thermal model and package stray inductance. The device structure with package stray inductance is shown in Fig. 2a. The symbol of Level 3 is shown in Fig. 2b, which has two additional pins. They are the Tc terminal (case temperature) and Tj terminal (junction temperature).

 © 2019 GaN Systems Inc.

(a) (b)

Fig. 2. Level 3 model (a) structure, (b) symbol

The thermal model inside the device model is Cauer model [1]. The junction-to-case thermal resistance is included in the Spice model for each device. Therefore, user only needs to define either a case temperature or an ambient temperature along with adding a case-to-ambient thermal resistance, like heatsink or thermal interface material (TIM). The thermal model structure and the possible connections are shown in Fig. 3. Unlike to Level 1, the TEMP does not need to be defined in the SPICE Directive command for Level 3.

Note: in the thermal model, voltage source indicates temperature in °C and resistor indicates thermal resistance in °C/W.

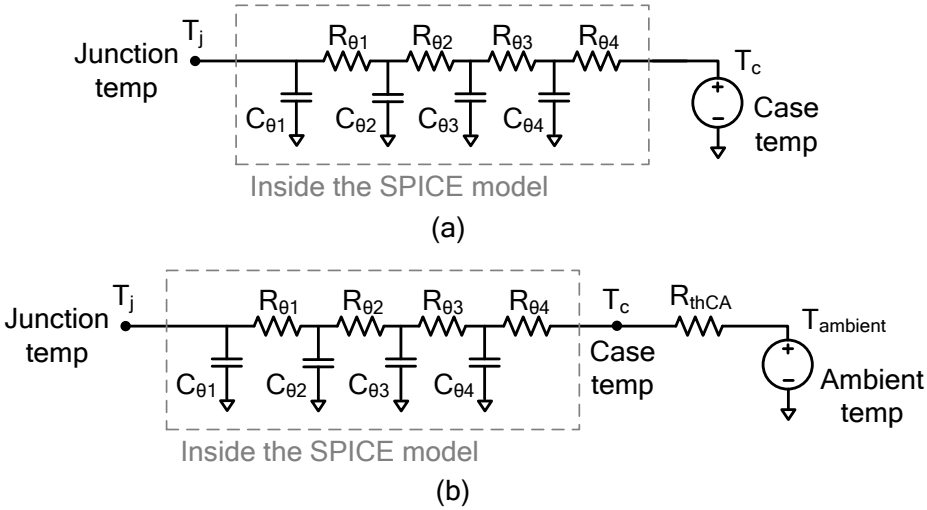

Fig. 3. SPICE Cauer model with (a) case temp as input, (b) case-to-ambient thermal resistance and ambient temp as inputs

 © 2019 GaN Systems Inc.

A simple boost converter is used as an example shown in Fig. 4. An ambient temperature and heatsink thermal resistance are defined as 25°C and 10 °C/W, respectively. The simulation results are shown in Fig. 5 and Fig. 6. It is clear that the transient junction and case temperatures are risen from the 25°C ambient temperature and then reach to their steady states.

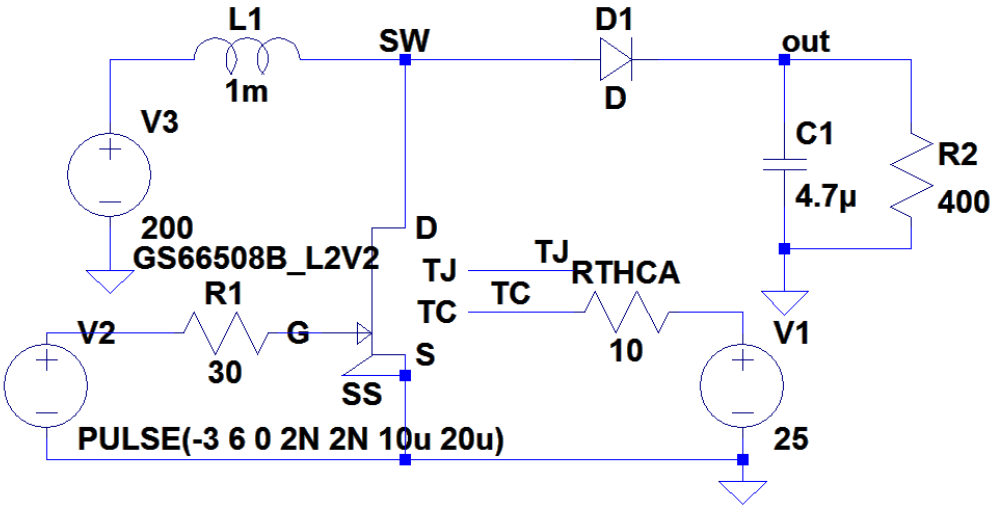

Fig. 4. A boost converter simulation example

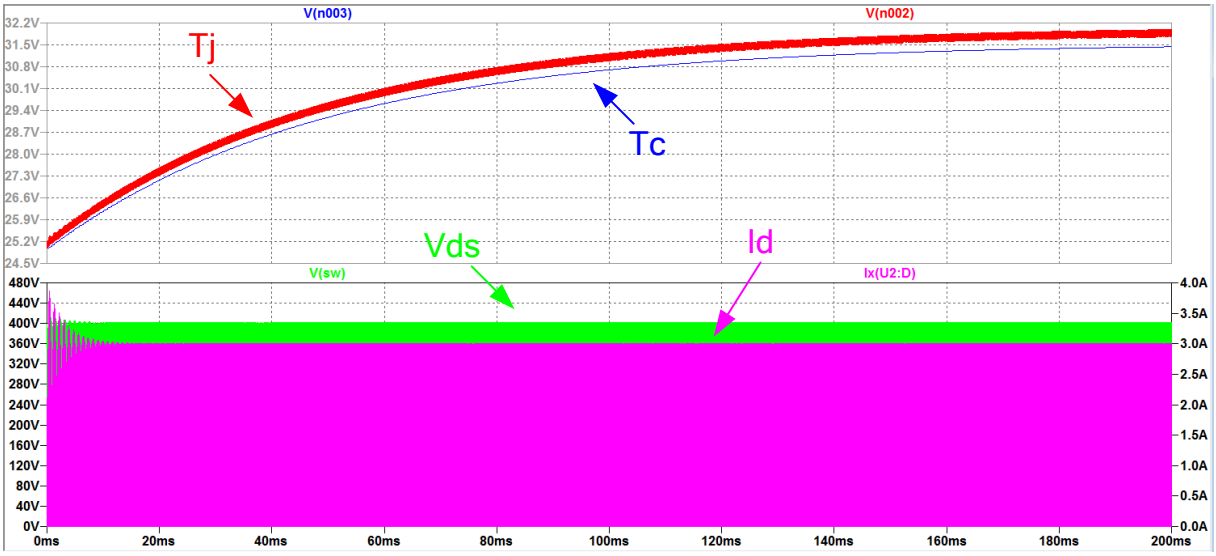

Fig. 5. Simulation waveforms of boost converter

© 2019 GaN Systems Inc.

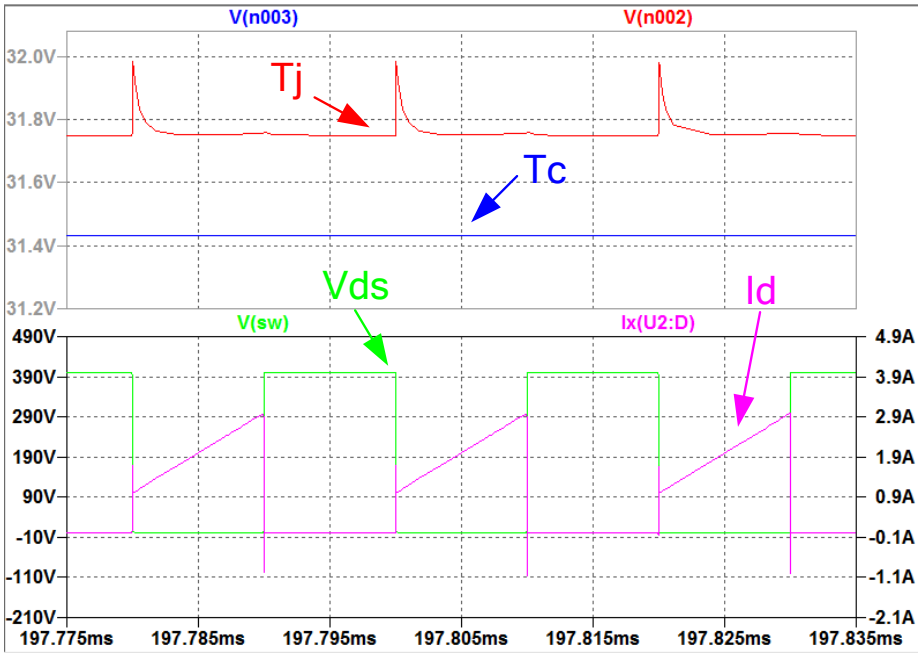

Fig. 6. Zoomed simulation waveforms of boost converter

3. Model Files Setup

3.1. LTspice model files setup

Each of the LTspice model files includes one .lib file and one asy. file. Before implementing the LTspice model-based simulation circuit, the LTspice model files need to be installed into the user's LTspice simulation tool library.

For LTspice model, the path to place the .lib file is shown as below,

This PC → Documents → LTspice → lib → sub

The path to place the .asy file is shown as below,

This PC → Documents → LTspice → lib → sym

Once place the files under the library, please restart the LTspice program. Then the device should be able to be found in the "component" ( ) section.

 © 2019 GaN Systems Inc.

3.2. Pspice model files setup

The Pspice model file is in .lib format. Before implementing the Pspice model-based simulation circuit, the Pspice model files need to be installed into the user's Pspice simulation tool library. A symbol can be created automatically for the users when associating the models and symbols.

4. Reference

[1] GaN Systems, GN007 Modeling Thermal Behavior of GaNPX® E-HEMTs Using RC Thermal SPICE Models, [Online]. Available: http://www.gansystems.com/whitepapers.php

In Canada:

GaN Systems Inc.
1145 Innovation Drive Suite 101
Ottawa, Ontario, Canada K2K 3G8
T +1 613-686-1996

In Europe:

GaN Systems Ltd., German Branch
Terminalstrasse Mitte 18,
85356 München, Germany
T +49 (0) 8165 9822 7260

In the United States:

GaN Systems Corp.
2723 South State Street, Suite 150,
Ann Arbor, MI. USA 48104
T +1 248-609-7643

 © 2019 GaN Systems Inc.

www.gansystems.com
Important Notice – Unless expressly approved in writing by an authorized representative of GaN Systems, GaN Systems components are not designed, authorized or warranted for use in lifesaving, life sustaining, military, aircraft, or space applications, nor in products or systems where failure or malfunction may result in personal injury, death, or property or environmental damage. The information given in this document shall not in any event be regarded as a guarantee of performance. GaN Systems hereby disclaims any or all warranties and liabilities of any kind, including but not limited to warranties of non-infringement of intellectual property rights. All other brand and product names are trademarks or registered trademarks of their respective owners. Information provided herein is intended as a guide only and is subject to change without notice. The information contained herein or any use of such information does not grant, explicitly, or implicitly, to any party any patent rights, licenses, or any other intellectual property rights. General Sales and Terms Conditions apply.
© 2009-2017 GaN Systems Inc. All rights reserved.